Blü

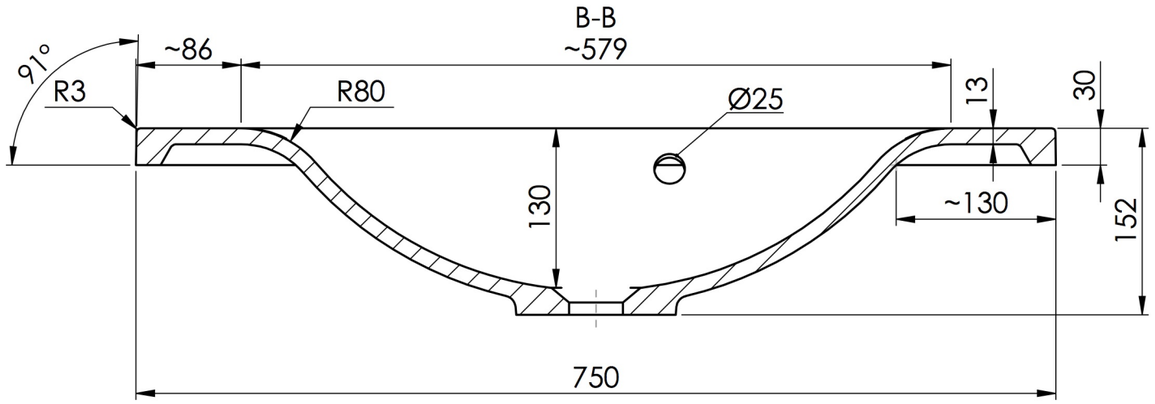

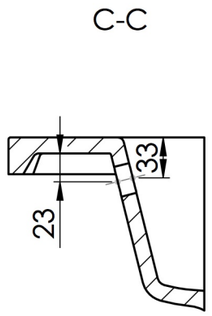

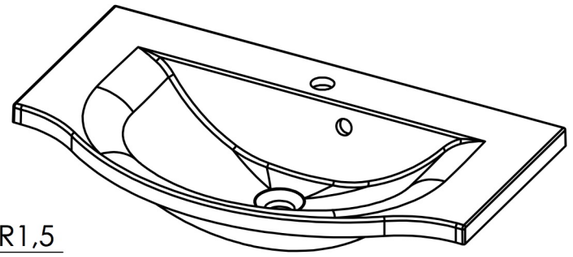

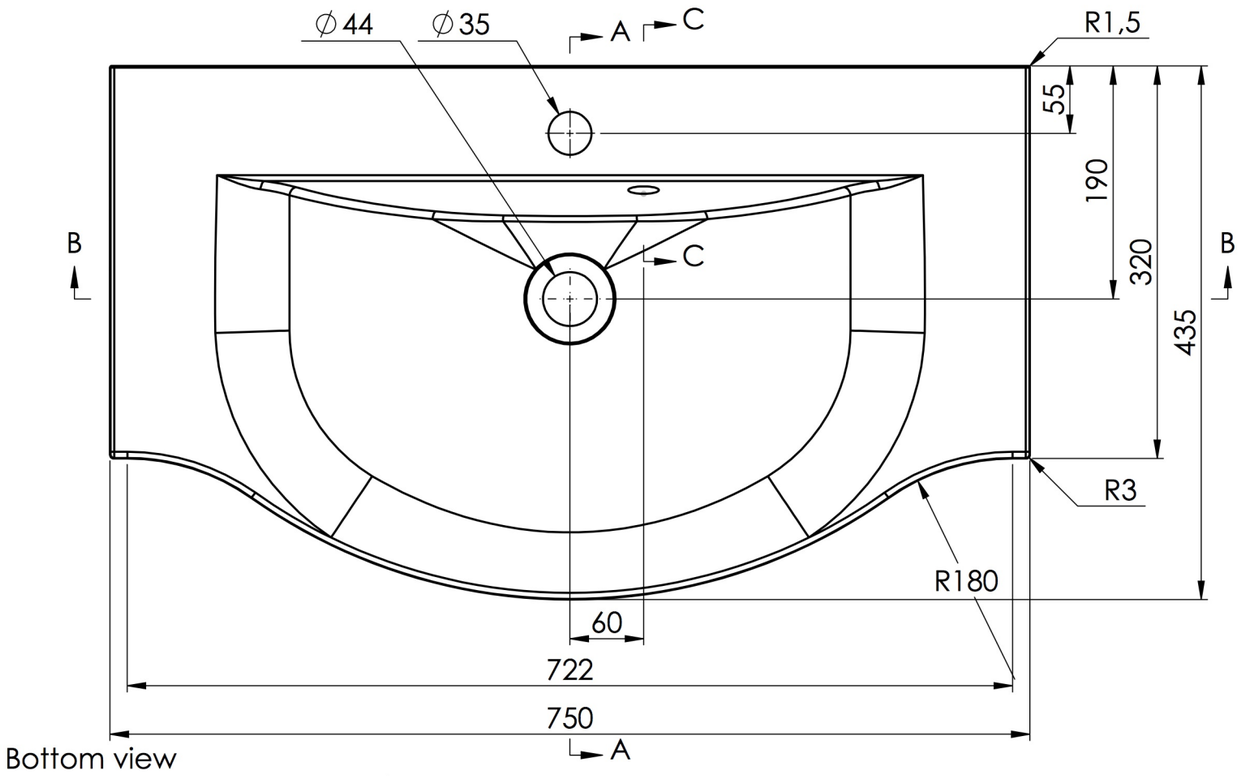

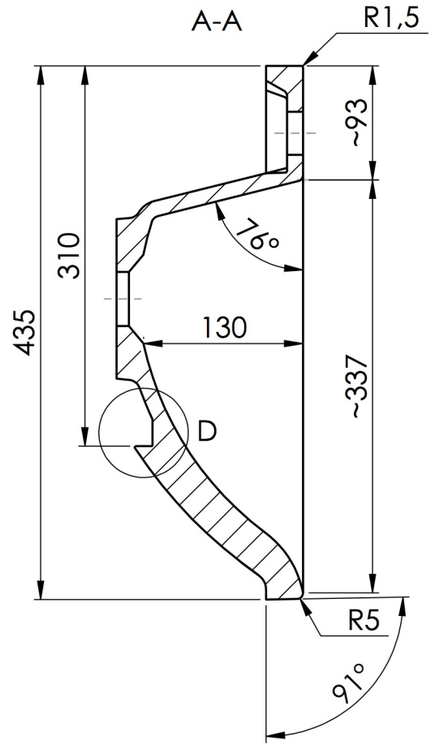

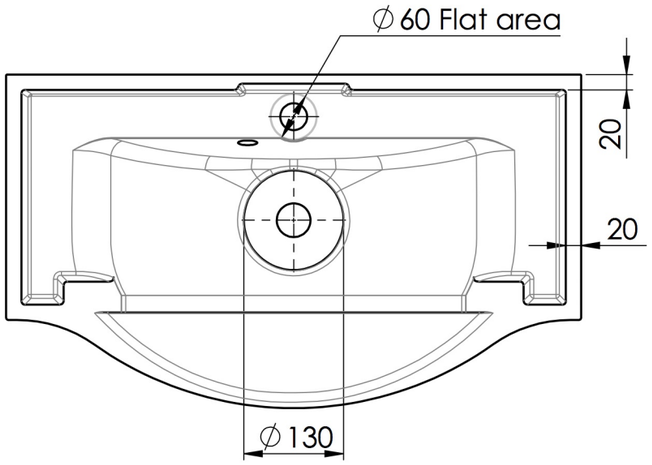

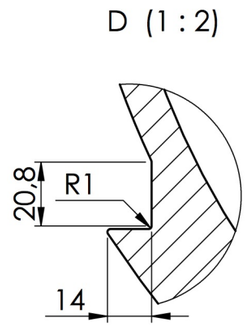

TOLERANCE: +3/-3 mm

CALABRIA 750 C