Blü

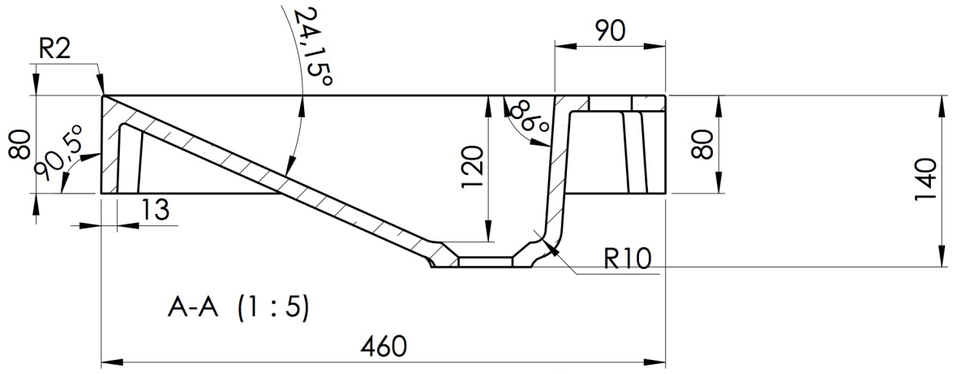

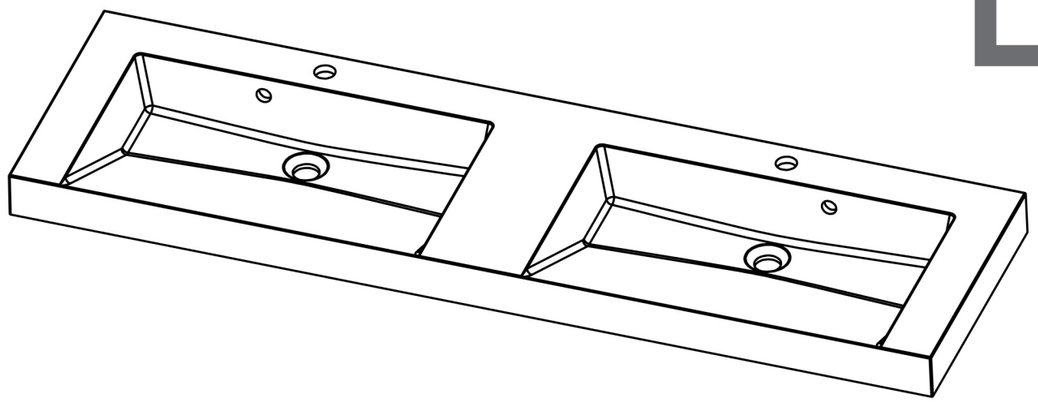

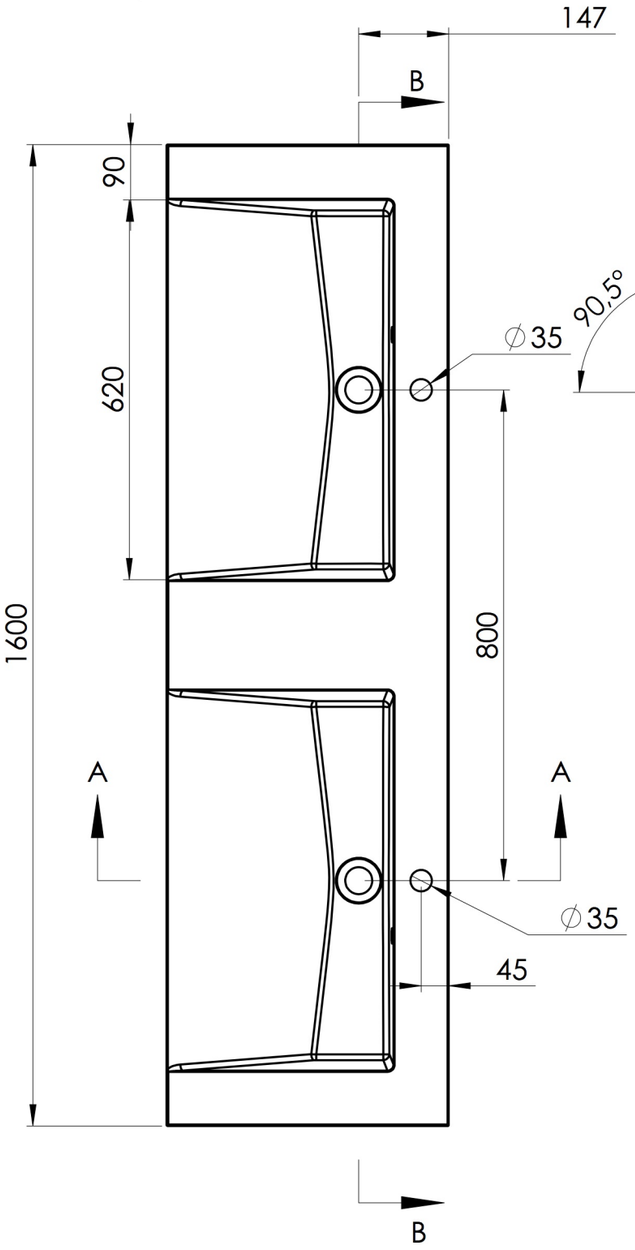

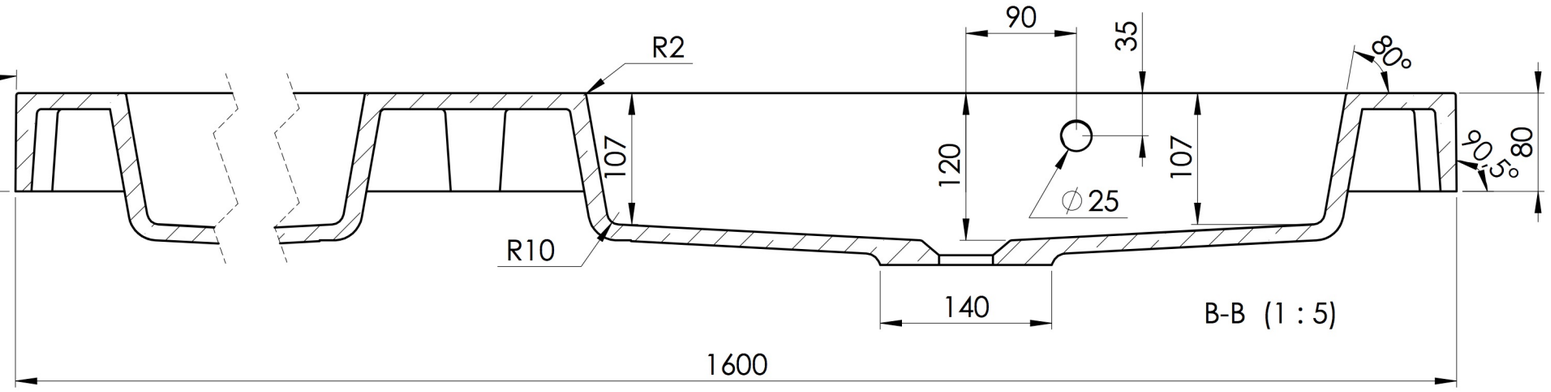

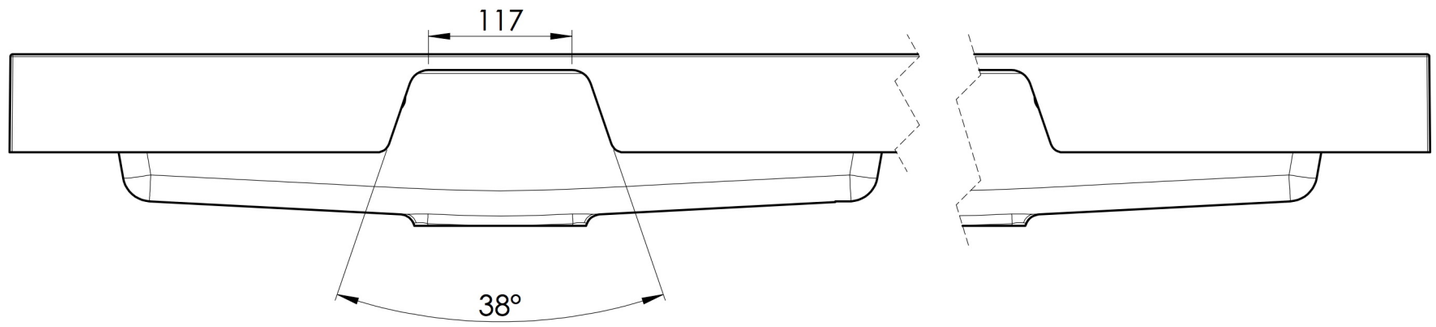

TOLERANCE +3/-3 mm

FRIULI 1600 D