Blü

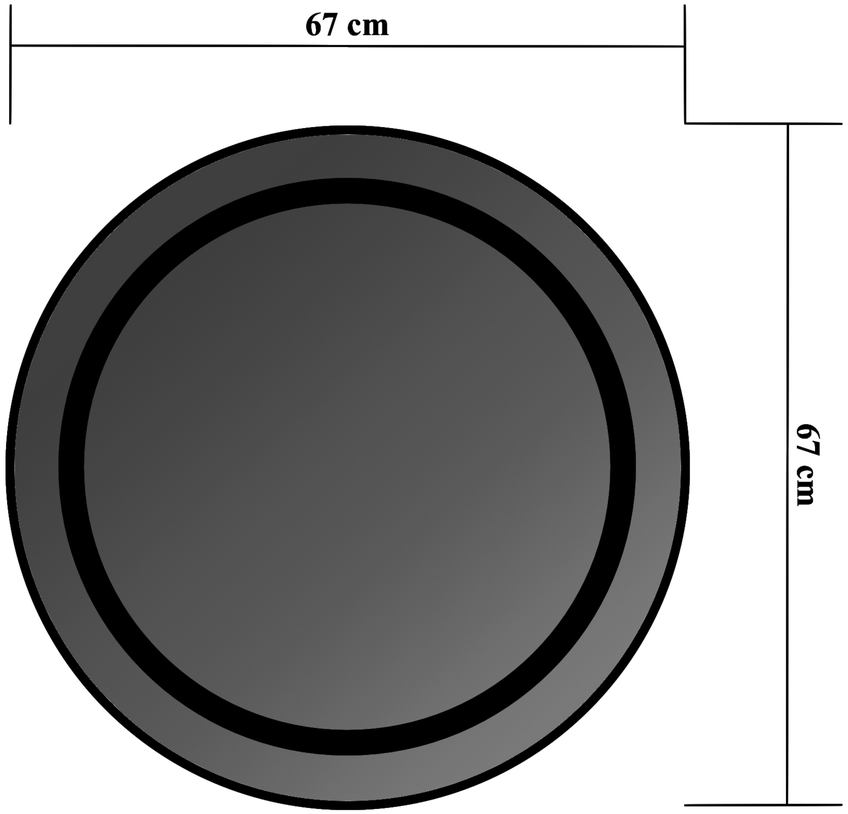

LEON round 67 Ø